CERTIFIED RECORD OF LAND CORNER MONUMENT

HISTORY OF ORIGINAL CORNER ESTABLISHMENT:

Corner originally established by T. Davenport under GLO Contract Number 102, with an accepted date of January 12th, 1864. Surveyor General record states:

Set post for section corner in mound of earth, with charred stake, pits, trench as per instructions.

No information found for the establishment of the existing monument found by Merrick & Company.

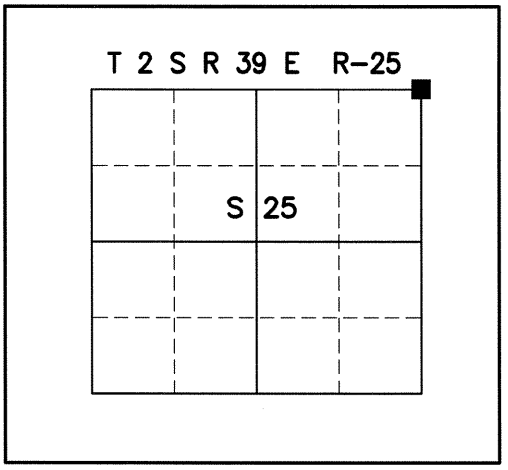

DESCRIPTION OF CORNER EVIDENCE FOUND:

FOUND 16" DIA. OCTAGON SHAPED CONCRETE POST PROJECTING 24" ABOVE GROUND WITH MARKING "T" ON THE SIDE WITH 2 5/8" DIA. REBARS ATTACHED TO THE SIDES.

DESCRIPTION OF MONUMENT AND ACCESSORIES THAT I ESTABLISHED TO PERPETUATE THE ORIGINAL LOCATION OF THIS CORNER:

ACCEPTED FOUND 16" DIA. OCTAGON SHAPED CONCRETE POST

ACCESSORIES (BEARING OBJECTS):

Set 60d Nail 2.6' above ground in north face of existing 8" dia. deciduous tree, that bears N57°E from center of found monument, 60.0 feet.

Set 60d Nail 2.6' above ground in east face of existing 6" dia. deciduous tree, that bears S30°E from center of found monument, 19.6 feet.

Set 60d Nail 2.8' above ground in north face of existing 6" dia. deciduous tree, that bears S32°W from center of found monument, 37.5 feet.

Set 60d Nail 3.5' above ground in east face of existing railroad tie post, that bears S68°W from center of found stone monument, 170.3 feet.

I hereby certify that the corner was found on July 11th, 2019.
Witnessed by: Kevin Kenna & Seth Gould

REGISTERED PROFESSIONAL LAND SURVEYOR

OREGON
NOVEMBER 7, 2011
VERNEN KALANI LEE
85504

EXPIRES: 12/31/2020

UNION COUNTY SURVEYOR

DATE RECEIVED: 9/20/19
DATE FILED: 9/24/19
FILED BY:
FILE NUMBER: 053-2019R

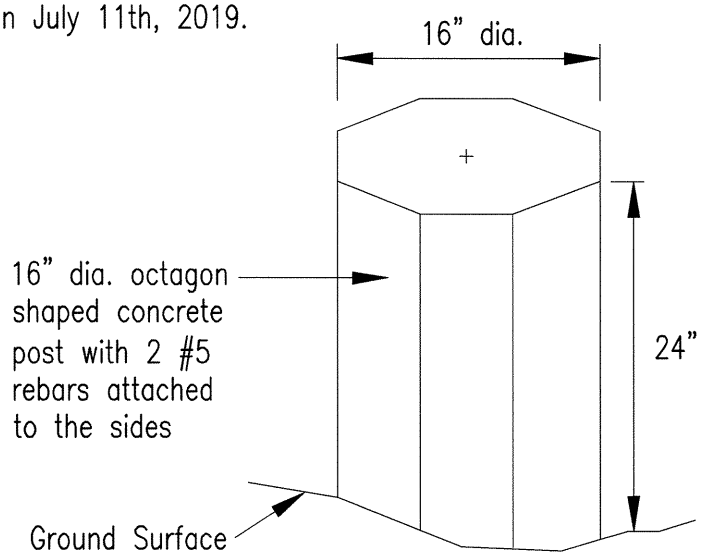

FIELD CREW USED A COMPASS OR GPS WITH STEEL TAPE FOR ESTABLISHMENT OF THE NEW ACCESSORIES. ALL DISTANCES STATED ARE HORIZONTAL DISTANCES FROM CENTER OF FOUND 16" DIA. OCTAGON CONCRETE POST TO THE STATED ACCESSORY.

R-25

CERTIFIED RECORD OF LAND CORNER MONUMENTATION

HISTORY OF ORIGINAL CORNER ESTABLISHED:

T 2 S R 39 E R-25

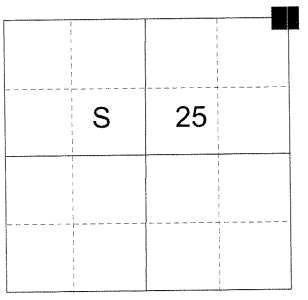

Corner originally established by David P. Thompson under GLO contract 103, dated September 3rd, 1863. Surveyor General field notes state:

Set post for section corner in mound of earth with charred stake, pits, trench, as per instructions.

Corner found in Union County old book Survey 144.

Corner found in Union County old book Survey 034. Record states: Found the corner to sec. 24-25-19-30 on guide meridian bet. Ranges 39 and 40 East.

Corner found in Union County Survey 085-1974. Record states: Found Stone.

Unrecorded monument found in Union County Survey 029-2019.
Union County Monumentation record 053-2019R states: Found 16" dia. octagon shaped concrete post projecting 25" above ground with marking "T" on the side with 2 5/8" diam. rebars attached to the sides.
from which:
A 60d Nail, 2.6' above ground, in North face of an 8" dia. deciduous tree bears North 57° East, a dist. of 60.0 feet.
A 60d Nail, 2.6' above ground, in East face of an 6" dia. deciduous tree bears South 30° East, a dist. of 19.6 feet.
A 60d Nail, 2.8' above ground, in North face of an 6" diam. deciduous tree bears South 32° West, a dist. of 37.5 feet.
A 60d Nail, 3.5' above ground, in East face of an existing railroad tie bears South 68° West, a dist. of 170.3 feet.

DESCRIPTION OF CORNER EVIDENCE FOUND:

Found 16" dia. octagon shaped concrete post projecting 25" above ground with marking "T" on the side.
from which:
A 60d Nail, 2.6' above ground, in North face of an 8" dia. Hawthorn tree bears North 57° East, a dist. of 60.0 feet.
A 60d Nail, 2.6' above ground, in East face of an 6" dia. Hawthorn tree bears South 30° East, a dist. of 19.6 feet.
A 60d Nail, 2.8' above ground, in North face of an 6" diam. Hawthorn tree bears South 32° West, a dist. of 37.5 feet.
A 60d Nail, 3.5' above ground, in East face of an existing railroad tie bears South 68° West, a dist. of 170.3 feet.

The current owner, Craig Schmitt, attests that the previous owner (who is now deceased) had replaced the stone found by Survey 085-1974 with a section of bridge piling. I measure from found pins of said survey to verify the location. The octagonal concrete matches remnants of other pieces of concrete in the vicinity of the entry bridge to the Northeast.

DESCRIPTION OF MONUMENT AND ACCESSORIES I ESTABLISHED TO MONUMENT THE ORIGINAL LOCATION OF THIS CORNER:

At the center of the found octagonal concrete post, I set a 5/8" x 10" iron pin, drilled 8" into the concrete, with a 2 ½" aluminum cap marked as shown below.

I hereby certify that the corner was monumented on March 10, 2020.
Witness: Kyle A. Tucker

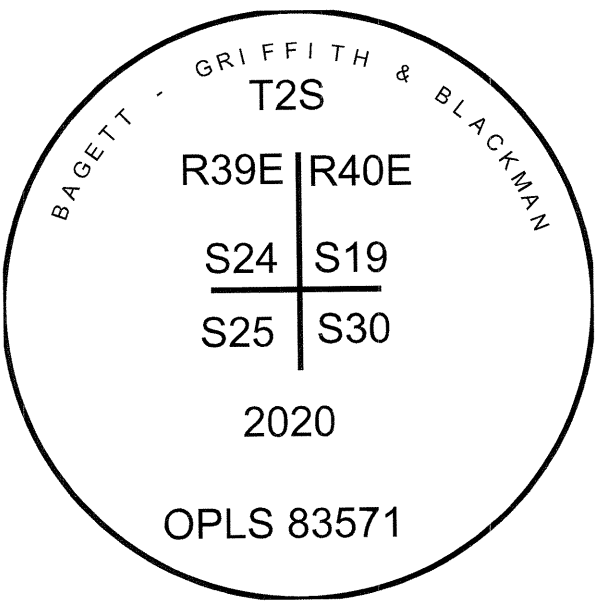

UNION COUNTY SURVEYOR
Date Received 3/17/20
Date Filed 3/17/20
Filed By
File Number 002-2020R

REGISTERED PROFESSIONAL LAND SURVEYOR
OREGON
June 2, 2010
JEFFREY S. HSU
83571
Renewal Date: June 30, 2021

I used a steel tape and magnetic compass in the verification of the accessories. I used 14° East declination, the distances and bearings are to the 60d spike

HORIZONTAL CONTROL DATA
UNION COUNTY, OREGON
OREGON STATE PLANE, NORTH ZONE (3601)

STA NAME: 2020015

SECTION CORNER COMMON TO SECTIONS 19, 24, 25 AND 30

TWP. 2 S RGE. 39 & 40 E.

DATE TIED: March 10, 2020

SURVEYOR: RICK G. ROBINSON
OPLS 2219

FIRM: BAGETT, GRIFFITH, & BLACKMAN
2006 ADAMS AVENUE
LAGRANDE, OR 97850
(541) 963-6092

TYPE: GPS

ORDER: SECOND CLASS: 1

GEODETIC COORD: NAD 83(91)

LAT: 45 ° 22 ' 10.12048 " N

LONG: 117 ° 52 ' 14.06944 " W

SP. COOR: NAD 83(91)

N: 631793.991 INT FT.

E: 8877717.395 INT FT.

THETA: 1 ° 51 ' 53.1055886 "

SCALE FACTOR: 0.999900707

ELEV: 2685.55 US FT.

ELEV: DATUM: NGVD 29

COMMENTS:

16" dia. concrete post, 25" exposed with a 5/8" iron pin with 2 1/2" aluminum cap marked as shown

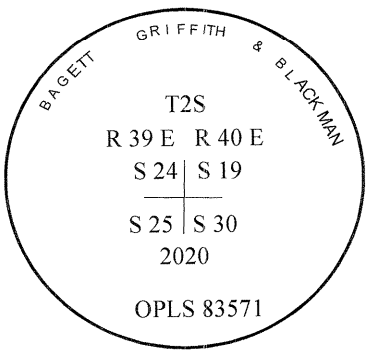

REGISTERED
PROFESSIONAL
LAND SURVEYOR
OREGON
July 17, 1986
RICK G. ROBINSON
2219

Renewal Date: December 31, 2020

1 METER = 3.2808333333... US FEET = 39.37 INCHES
1 METER = 3.280839895 INT'L FEET OR 1 INCH = 2.54 CM
TO CALCULATE ELEVATION FACTOR (IN THE NORTH AMERICAN CONTINENT)
DIVIDE 20,906,000 BY (20,906,000 + ELLIPSOID ELEV. IN FEET)